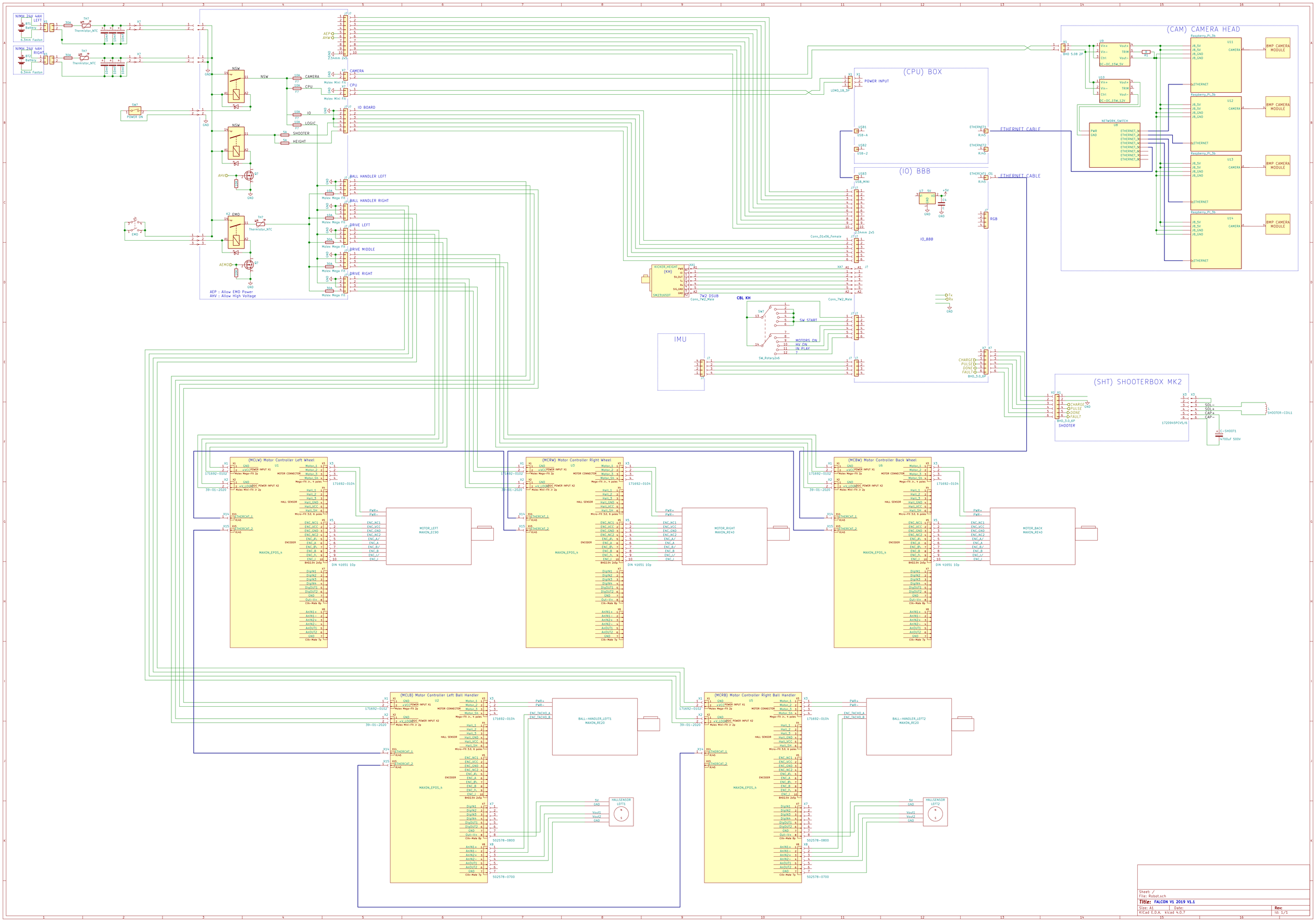
NiMH 24V 4AH LEFT
NiMH 24V 4AH RIGHT
Thermistor_NTC
POWER ON
NSW
EMO
AEP : Allow EMO Power
AHV : Allow High Voltage
CAMERA
CPU
IO
LOGIC
SHOOTER
HEIGHT
IO BOARD
BALL HANDLER LEFT
BALL HANDLER RIGHT
DRIVE LEFT
DRIVE MIDDLE
DRIVE RIGHT
(CPU) BOX
POWER INPUT
(IO) BBB
IO_BBB
ETHERNET CABLE
(CAM) CAMERA HEAD
Raspberry_Pi_3b
8MP CAMERA MODULE
NETWORK_SWITCH
RGB
KICKER_HEIGHT (KH)
SM231650T
7W2 DSUB
CBL KH
SW_START
MOTORS_ON
HV_ON
IN_PLAY
IMU
(SHT) SHOOTERBOX MK2
CHARGE
PULSE
DONE
FAULT
SHOOTER
SOL-
SOL+
CAP+
CAP-
SHOOTER-COIL1
C-SHOOT1
4700uF 500V
(MCLW) Motor Controller Left Wheel
(MCRW) Motor Controller Right Wheel
(MCBW) Motor Controller Back Wheel
(MCLB) Motor Controller Left Ball Handler
(MCRB) Motor Controller Right Ball Handler
MAXON_EPOS_4
MOTOR_LEFT MAXON_EC90
MOTOR_RIGHT MAXON_RE40
MOTOR_BACK MAXON_RE40
BALL-HANDLER_LEFT1 MAXON_RE20
BALL-HANDLER_LEFT2 MAXON_RE20
HALLSENSOR LEFT1
HALLSENSOR LEFT2
DIN 41651 10p
Sheet: /
File: Robot.sch
Title: FALCON V1 2019 V1.1
Size: A1
Date:
Rev:
KiCad E.D.A. kicad 4.0.7
Id: 1/1