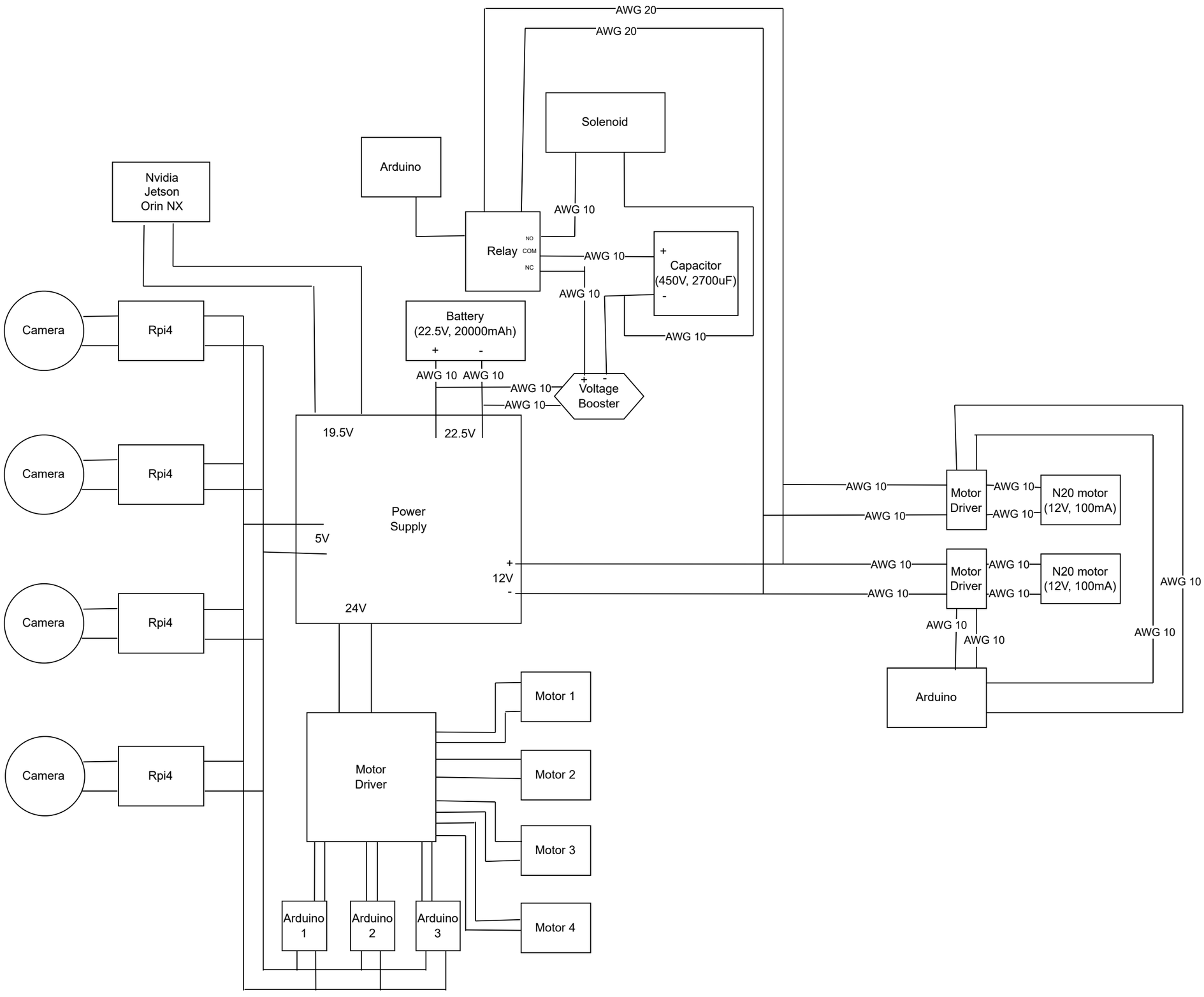
AWG 20
AWG 20
Solenoid
Arduino
Nvidia
Jetson
Orin NX
AWG 10
Relay
NO
COM
NC
AWG 10
+
Capacitor
(450V, 2700uF)
-
AWG 10
AWG 10
Camera
Rpi4
Battery
(22.5V, 20000mAh)
+
-
AWG 10
AWG 10
AWG 10
AWG 10
+
-
Voltage
Booster
19.5V
22.5V
Camera
Rpi4
Power
Supply
5V
+
12V
-
24V
AWG 10
AWG 10
Motor
Driver
AWG 10
AWG 10
N20 motor
(12V, 100mA)
AWG 10
AWG 10
Motor
Driver
AWG 10
AWG 10
N20 motor
(12V, 100mA)
AWG 10
AWG 10
AWG 10
AWG 10
Arduino
Camera
Rpi4
Motor 1
Camera
Rpi4
Motor
Driver
Motor 2
Motor 3
Arduino
1
Arduino
2
Arduino
3
Motor 4

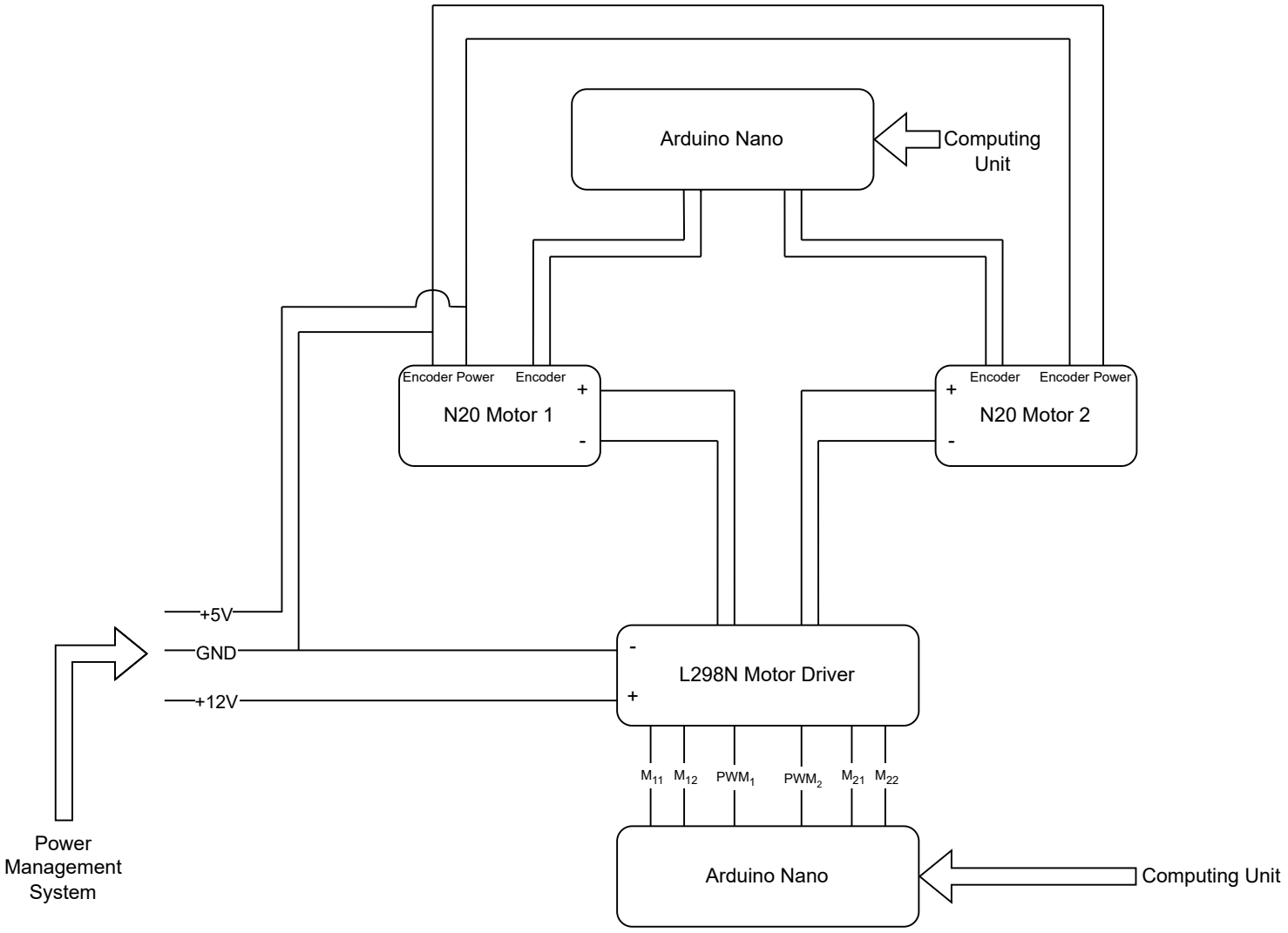
Arduino Nano
Computing Unit
Encoder Power
Encoder
+
N20 Motor 1
-
Encoder
Encoder Power
+
N20 Motor 2
-
+5V
GND
+12V
-
L298N Motor Driver
+
M11
M12
PWM1
PWM2
M21
M22
Power Management System
Arduino Nano
Computing Unit

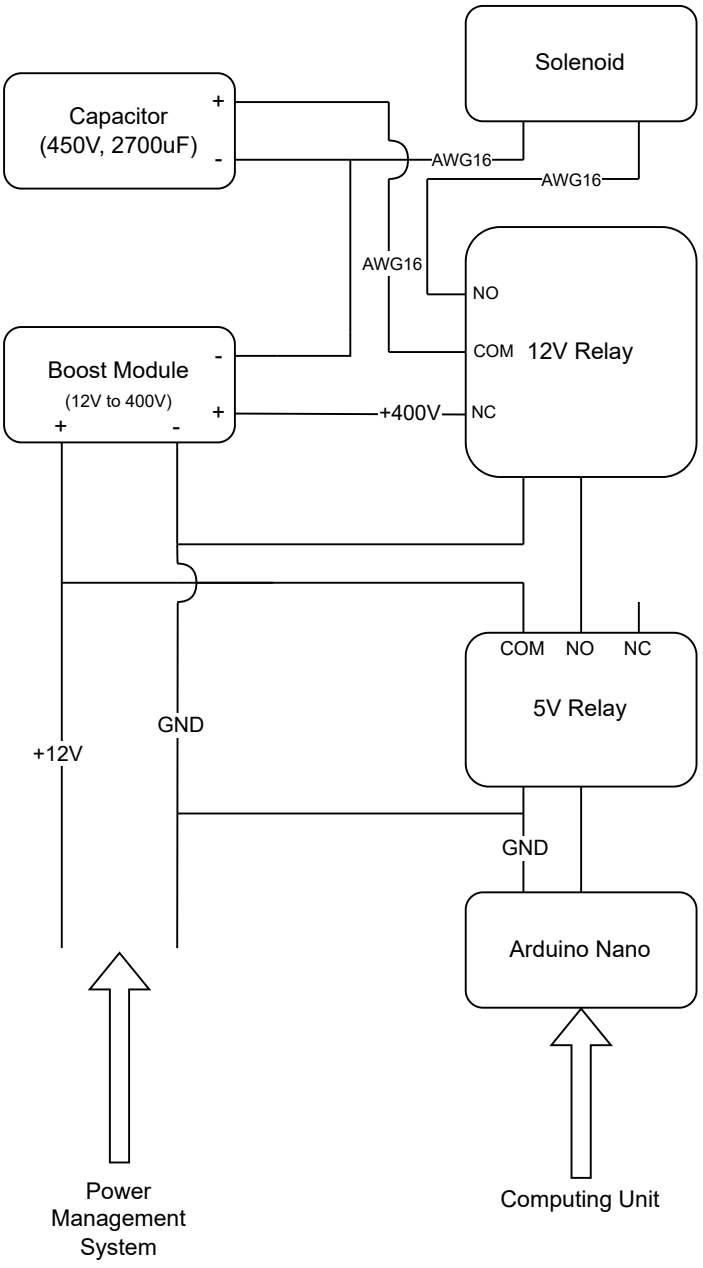
Solenoid
Capacitor
(450V, 2700uF)
+
-
AWG16
AWG16
AWG16
NO
COM
12V Relay
NC
Boost Module
(12V to 400V)
-
+
+
-
+400V
COM
NO
NC
5V Relay
GND
+12V
GND
Arduino Nano
Power
Management
System
Computing Unit